rrmdesigngroup
creating environments people enjoy®
3765 South Higuera St., Ste. 102, San Luis Obispo, CA 93401
P: (805) 543-1794 | F: (805) 543-4609 | www.rrmdesign.com
A California Corporation | Victor Montgomery, Architect #C11090 | Jerry Michael, PE #36895, LS #6276 | Jeff Ferber, LA #2844

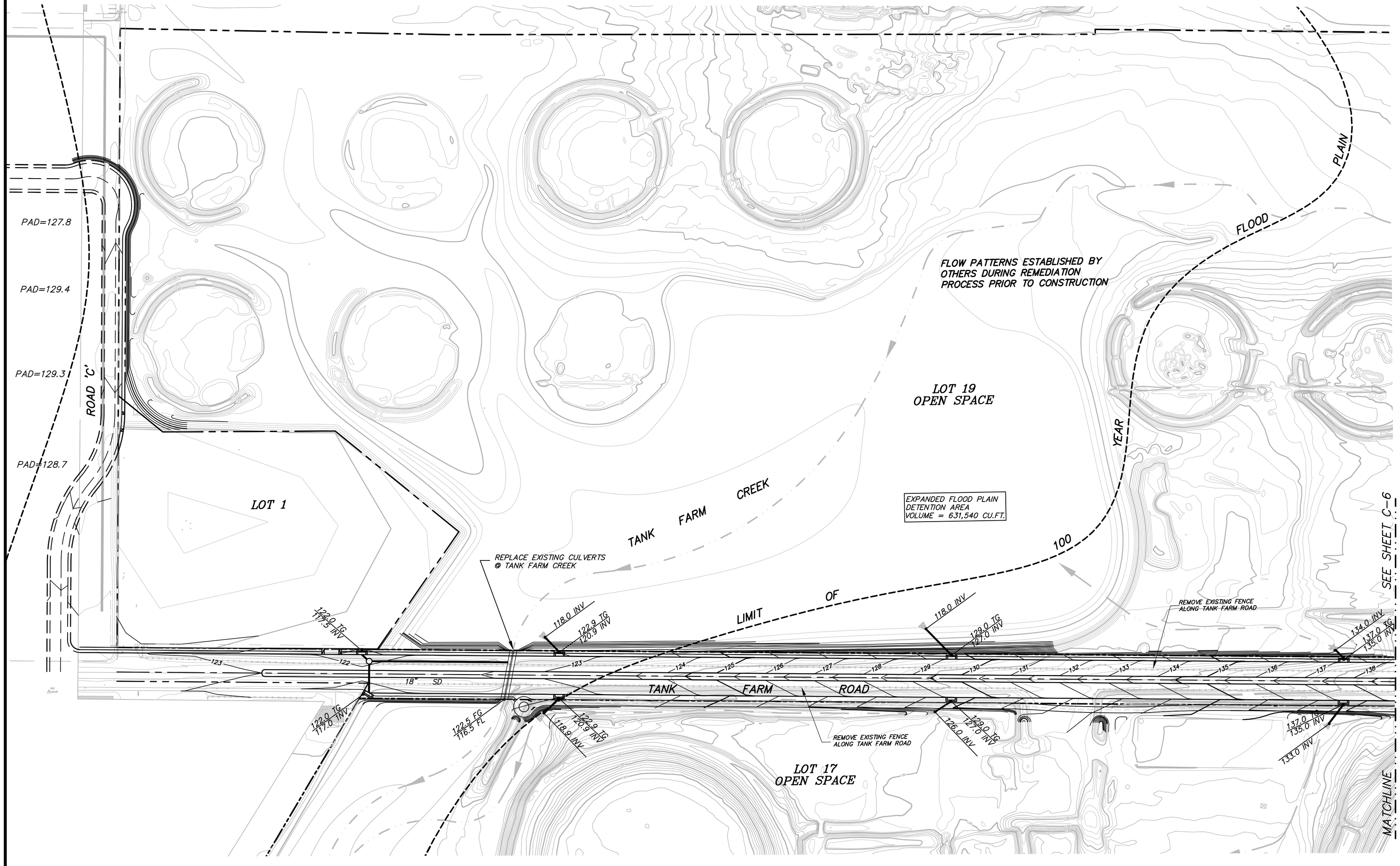

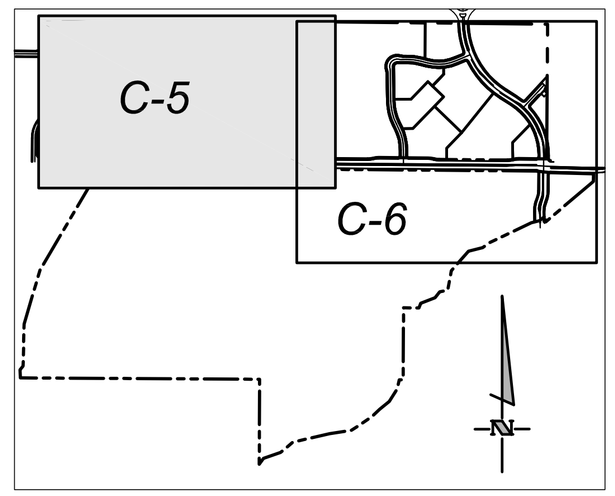

KEY MAP

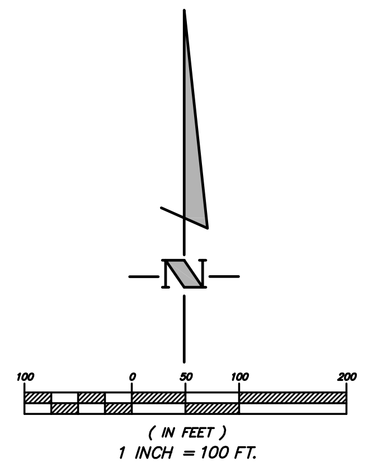

Job No.: 2008020

Grading & Drainage Plan

San Luis Obispo Tank Farm

Tract 2981, City of San Luis Obispo

June 18, 2008 revised Nov 19, 2008 SHEET: 5 of 8

C-5